Work Order ID 67192

Thursday, March 10, 2011 8:47:11 AM

Item ID: D350-591-311 **Accept** **Setup Start** **Stop**

Revision ID:

Item Name: Heli-Access-Step, Long LH

Start Date: 3/10/2011 **Start Qty:** 10.00 **Cust Item ID:**

Required Date: 3/18/2011 **Req'd Qty:** 10.00 **Customer:**

Reference:

Approvals: **Process Plan:** ___ **Date:** 11-03-10 **Tooling:** ___ **Date:** ___ **Run Start** **Stop**

QC: ___ **Date:** ___ **SPC (Y/N):** ___ **Date:** ___

Sequence ID/ Work Center ID	Operation Description	Set Up/ Run Hours	Tool ID	Tool #	Plan Code	Accept Qty	Reject Qty	Reject Number	Insp. Stamp
Draw Nbr	**Revision Nbr**								
D3272	Rev B								
100	DOCUMENT CONTROL	0.00							
DC	**Memo** SH 92-6	0.00							
Document Control	Photocopy bluefile and type labels as per PPP D350-591-311 CHG001								
110	Large Fab	0.00							
Large Fab	**Memo**	0.00							
Large Fab	1-Bevel end for welding FWD ONLY								
	2-Weld Support using Jig DT8719, weld Fwd End Plate as per QSI 004 & Dwg D3272								
	A/R Aluminum Rod M104703 M115928								
	3-Grind End Plate flush								

Sulayln

11-03-29 10

Dart Aerospace Ltd

W/O:		WORK ORDER CHANGES					
DATE	STEP	PROCEDURE CHANGE	By	Date	Qty	Approval Chief Eng / Prod Mgr	Approval QC Inspector

Part No: _____ **PAR #:** _____ **Fault Category:** _____ **NCR:** Yes No **DQA:** _____ **Date:** _____

Resolution: _____ **Disposition:** _____ **QA: N/C Closed:** _____ **Date:** _____

NCR:		WORK ORDER NON-CONFORMANCE (NCR)						
DATE	STEP	Description of NC Section A	Corrective Action Section B			Verification Section C	Approval Chief Eng	Approval QC Inspector
			Initial Chief Eng	Action Description Chief Eng	Sign & Date			

NOTE: Date & initial all entries

H:\fFORMS\Quality Assurance\approved QA\NCRWO RevE

Work Order ID 67192

Thursday, March 10, 2011 8:47:11 AM

Item ID: D350-591-311 **Accept** **Setup** **Start** **Stop**

Revision ID:

Item Name: Heli-Access-Step, Long LH

Start Date: 3/10/2011 **Start Qty:** 10.00 **Cust Item ID:**

Required Date: 3/18/2011 **Req'd Qty:** 10.00 **Customer:**

Reference:

Run **Start** **Stop**

Approvals: **Process Plan:** _____ **Date:** _____ **Tooling:** _____ **Date:** _____

QC: _____ **Date:** _____ **SPC (Y/N):** _____ **Date:** _____

Sequence ID/ Work Center ID	Operation Description	Set Up/ Run Hours	Tool ID	Tool #	Plan Code	Accept Qty	Reject Qty	Reject Number	Insp. Stamp
120	QC9- Inspect visual per QSI004- Fusion Welds	0.00				10	Ø	3E11	03/29
QC	Memo	0.00							
Quality Control									
130	QC5- Inspect part completeness to step on W/O	0.00							
QC	Memo	0.00							
Quality Control									
140	Chemical Conversion Coat per QSI005 4.1	0.00							
HandFinish	Memo	0.00							
Hand Finishing									

5 11/03/29

x10 LH

10 LHx

11/03/30

Dart Aerospace Ltd

W/O:		WORK ORDER CHANGES					
DATE	STEP	PROCEDURE CHANGE	By	Date	Qty	Approval Chief Eng / Prod Mgr	Approval QC Inspector

Part No: _____ **PAR #:** _____ **Fault Category:** _____ **NCR:** Yes No **DQA:** _____ **Date:** _____

Resolution: _____ **Disposition:** _____ **QA: N/C Closed:** _____ **Date:** _____

NCR:		WORK ORDER NON-CONFORMANCE (NCR)						
DATE	STEP	Description of NC Section A	Corrective Action Section B			Verification Section C	Approval Chief Eng	Approval QC Inspector
			Initial Chief Eng	Action Description Chief Eng	Sign & Date			

NOTE: Date & initial all entries

H:\fFORMS\Quality Assurance\approved QA\NCRWO RevE

Work Order ID 67192

Thursday, March 10, 2011 8:47:11 AM

Item ID: D350-591-311 **Accept** **Setup Start** **Stop**

Revision ID:

Item Name: Heli-Access-Step, Long LH

Start Date: 3/10/2011 **Start Qty:** 10.00 **Cust Item ID:**

Required Date: 3/18/2011 **Req'd Qty:** 10.00 **Customer:**

Reference:

Run Start **Stop**

Approvals: **Process Plan:** _____ **Date:** _____ **Tooling:** _____ **Date:** _____

QC: _____ **Date:** _____ **SPC (Y/N):** _____ **Date:** _____

Sequence ID/ Work Center ID	Operation Description	Set Up/ Run Hours	Tool ID	Tool #	Plan Code	Accept Qty	Reject Qty	Reject Number	Insp. Stamp
150	QC3- Inspect Part Finish	0.00	11.03.30			10	ϕ		
QC	**Memo**	0.00							
Quality Control									
180		0.00							
Large Fab	Large Fab					10	ϕ		
Large Fab	**Memo**	0.00	11.03.31						

1-Assemble Leg Assembly as per Dwg D3272.

2-Leave one rivet out until welding is complete.

3-Bevel Aft end for welding

4-Inspect for foreign object as per QSI 024

5-Weld Aft End Plate as per QSI 004 & Dwg D3272
A/R□□Aluminum Rod□ m114703

6-Grind End Plate flush

7-Install last rivet as per Dwg.

Dart Aerospace Ltd

W/O:		WORK ORDER CHANGES					
DATE	STEP	PROCEDURE CHANGE	By	Date	Qty	Approval Chief Eng / Prod Mgr	Approval QC Inspector

Part No: _____ **PAR #:** _____ **Fault Category:** _____ **NCR:** Yes No **DQA:** _____ **Date:** _____

Resolution: _____ **Disposition:** _____ **QA: N/C Closed:** _____ **Date:** _____

NCR:		WORK ORDER NON-CONFORMANCE (NCR)						
DATE	STEP	Description of NC Section A	Corrective Action Section B			Verification Section C	Approval Chief Eng	Approval QC Inspector
			Initial Chief Eng	Action Description Chief Eng	Sign & Date			

NOTE: Date & initial all entries

H:\fFORMS\Quality Assurance\approved QA\NCRWO RevE

Work Order ID 67192

Thursday, March 10, 2011 8:47:11 AM

Item ID: D350-591-311 **Accept** **Setup Start** **Stop**

Revision ID:

Item Name: Heli-Access-Step, Long LH

Start Date: 3/10/2011 **Start Qty:** 10.00 **Cust Item ID:**

Required Date: 3/18/2011 **Req'd Qty:** 10.00 **Customer:**

Reference:

Run Start **Stop**

Approvals: **Process Plan:** _____ **Date:** _____ **Tooling:** _____ **Date:** _____

QC: _____ **Date:** _____ **SPC (Y/N):** _____ **Date:** _____

Sequence ID/ Work Center ID	Operation Description	Set Up/ Run Hours	Tool ID	Tool #	Plan Code	Accept Qty	Reject Qty	Reject Number	Insp. Stamp
190	QC10- Inspect visual per QSI004- ground welds	0.00							
QC	Memo	0.00							
Quality Control									
200	QC5- Inspect part completeness to step on W/O	0.00							
QC	Memo	0.00							
Quality Control									
210	Chemical Conversion Coat per QSI005 4.1	0.00				10		BK 11-4-1	
HandFinish	Memo	0.00							
Hand Finishing									

Dart Aerospace Ltd

W/O:		WORK ORDER CHANGES					
DATE	STEP	PROCEDURE CHANGE	By	Date	Qty	Approval Chief Eng / Prod Mgr	Approval QC Inspector

Part No: _____ **PAR #:** _____ **Fault Category:** _____ **NCR:** Yes No **DQA:** _____ **Date:** _____

Resolution: _____ **Disposition:** _____ **QA: N/C Closed:** _____ **Date:** _____

NCR:		WORK ORDER NON-CONFORMANCE (NCR)						
DATE	STEP	Description of NC Section A	Corrective Action Section B			Verification Section C	Approval Chief Eng	Approval QC Inspector
			Initial Chief Eng	Action Description Chief Eng	Sign & Date			

NOTE: Date & initial all entries

H:\fFORMS\Quality Assurance\approved QA\NCRWO RevE

Work Order ID 67192

Thursday, March 10, 2011 8:47:11 AM

Item ID: D350-591-311 **Accept** **Setup Start** **Stop**

Revision ID:

Item Name: Heli-Access-Step, Long LH

Start Date: 3/10/2011 **Start Qty:** 10.00 **Cust Item ID:**

Required Date: 3/18/2011 **Req'd Qty:** 10.00 **Customer:**

Reference:

Run Start **Stop**

Approvals: **Process Plan:** _____ **Date:** _____ **Tooling:** _____ **Date:** _____

QC: _____ **Date:** _____ **SPC (Y/N):** _____ **Date:** _____

Sequence ID/ Work Center ID	Operation Description	Set Up/ Run Hours	Tool ID	Tool #	Plan Code	Accept Qty	Reject Qty	Reject Number	Insp. Stamp
220	White Gloss(Ref:4.3.5.1) per QSI005 4.3-Alum	0.00				10X LH			
Powdercoat Powder Coating	**Memo** START TIME: 10:50 OVEN TEMPERATURE: 3:20 FINISH TIME: 11:20	0.00							
230	Wing Walk as per dwg QSI005 4.4 Batch N116402	0.00				10X LH			
HandFinish Hand Finishing	**Memo**	0.00							
240	QC3- Inspect Part Finish	0.00							
QC Quality Control	**Memo**	0.00							

N115951 M-L 11/04/02

M-L 11/04/02

M-L 11 04 02 (10)

Dart Aerospace Ltd

W/O:		WORK ORDER CHANGES					
DATE	STEP	PROCEDURE CHANGE	By	Date	Qty	Approval Chief Eng / Prod Mgr	Approval QC Inspector

Part No: _____ **PAR #:** _____ **Fault Category:** _____ **NCR:** Yes No **DQA:** _____ **Date:** _____

Resolution: _____ **Disposition:** _____ **QA: N/C Closed:** _____ **Date:** _____

NCR:		WORK ORDER NON-CONFORMANCE (NCR)						
DATE	STEP	Description of NC Section A	Corrective Action Section B			Verification Section C	Approval Chief Eng	Approval QC Inspector
			Initial Chief Eng	Action Description Chief Eng	Sign & Date			

NOTE: Date & initial all entries

H:\fFORMS\Quality Assurance\approved QA\NCRWO RevE

Work Order ID 67192

Thursday, March 10, 2011 8:47:11 AM

Item ID: D350-591-311 **Accept** **Setup Start**

Revision ID: **Stop**

Item Name: Heli-Access-Step, Long LH

Start Date: 3/10/2011 **Start Qty:** 10.00 **Cust Item ID:**

Required Date: 3/18/2011 **Req'd Qty:** 10.00 **Customer:**

Reference:

Run Start

Approvals: **Process Plan:** _____ **Date:** _____ **Tooling:** _____ **Date:** _____

Stop

QC: _____ **Date:** _____ **SPC (Y/N):** _____ **Date:** _____

Sequence ID/ Work Center ID	Operation Description	Set Up/ Run Hours	Tool ID	Tool #	Plan Code	Accept Qty	Reject Qty	Reject Number	Insp. Stamp
250	Pick Kit	0.00							
Packaging						11/4/8			
Packaging	**Memo**	0.00							
260	QC4- 100% Inspect kits for completeness	0.00							
QC						X10			
Quality Control	**Memo**	0.00				LH			
270		0.00							
Packaging	Packaging								
Packaging	**Memo**	0.00							
Packaging	Identify and pack for shipping as per PPPD350-591-311 Location:_____								

Dart Aerospace Ltd

W/O:		WORK ORDER CHANGES					
DATE	STEP	PROCEDURE CHANGE	By	Date	Qty	Approval Chief Eng / Prod Mgr	Approval QC Inspector

Part No: _____ **PAR #:** _____ **Fault Category:** _____ **NCR:** Yes No **DQA:** _____ **Date:** _____

Resolution: _____ **Disposition:** _____ **QA: N/C Closed:** _____ **Date:** _____

NCR:		WORK ORDER NON-CONFORMANCE (NCR)						
DATE	STEP	Description of NC Section A	Corrective Action Section B			Verification Section C	Approval Chief Eng	Approval QC Inspector
			Initial Chief Eng	Action Description Chief Eng	Sign & Date			

NOTE: Date & initial all entries

H:\fFORMS\Quality Assurance\approved QA\NCRWO RevE

Work Order ID 67192

Thursday, March 10, 2011 8:47:11 AM

Item ID: D350-591-311 **Accept** **Setup Start**

Revision ID: **Stop**

Item Name: Heli-Access-Step, Long LH

Start Date: 3/10/2011 **Start Qty:** 10.00 **Cust Item ID:**

Required Date: 3/18/2011 **Req'd Qty:** 10.00 **Customer:**

Reference:

Run Start

Approvals: **Process Plan:** _____ **Date:** _____ **Tooling:** _____ **Date:** _____

Stop

QC: _____ **Date:** _____ **SPC (Y/N):** _____ **Date:** _____

Sequence ID/ Work Center ID	Operation Description	Set Up/ Run Hours	Tool ID	Tool #	Plan Code	Accept Qty	Reject Qty	Reject Number	Insp. Stamp
280	QC21- Final Inspection - Work Order Release	0.00						11/4/12	
QC	Memo	0.00							
Quality Control									

11-04-12

10

Dart Aerospace Ltd

W/O:		WORK ORDER CHANGES					
DATE	STEP	PROCEDURE CHANGE	By	Date	Qty	Approval Chief Eng / Prod Mgr	Approval QC Inspector

Part No: _____ **PAR #:** _____ **Fault Category:** _____ **NCR:** Yes No **DQA:** _____ **Date:** _____

Resolution: _____ **Disposition:** _____ **QA: N/C Closed:** _____ **Date:** _____

NCR:		WORK ORDER NON-CONFORMANCE (NCR)						
DATE	STEP	Description of NC Section A	Corrective Action Section B			Verification Section C	Approval Chief Eng	Approval QC Inspector
			Initial Chief Eng	Action Description Chief Eng	Sign & Date			

NOTE: Date & initial all entries

H:\fFORMS\Quality Assurance\approved QA\NCRWO RevE

Picklist Print

Thursday, March 10, 2011 8:47:17 AM

Work Order ID: 67192

Parent Item: D350-591-311

Parent Item Name: Heli-Access-Step, Long LH

Start Date: 3/10/2011 **Required Date:** 3/18/2011

Start Qty: 10.00 **Required Qty:** 10.00

Comments: IPP Rev:A□04.03.22□New issue □KJ/RF
IPP Rev:B 07-06-09 Added D3272-1 JLM□
IPP C returned to CHG001 for Eurocopter, ref NCR08-082 LL verifed by:EC IPP Rev:D fixe route seq in bom DD 10.04.28 verified by:EC

Component Item ID/ Item Name	Replacement Item ID	Mfg/ Purch	Bin Item	Primary Location	Last Location	Route Seq ID	Unit of Measure	Qty on Hand	Qty per Kit	Total Qty	Qty Issued	Date Issued	Status
D3272-1 Step		Manufactured	No			110	Each	20.0000	1	10	11·03·15		
				Location			**Loc Qty**		**Loc Code**				
				WA			20			10			
				66623			10						
				66624			10						
D3067-1 End Plate		Manufactured	No			110	Each	128.0000	1	10	11·03·23		
				Location			**Loc Qty**		**Loc Code**				
				WA			128						
				65969			128			10			
D3219-1 Plate		Manufactured	No			110	Each	116.0000	2	20	11·03·23		
				Location			**Loc Qty**		**Loc Code**				
				WA			116						
				66133			116			20			

Dart Aerospace Ltd

W/O:		WORK ORDER CHANGES					
DATE	STEP	PROCEDURE CHANGE	By	Date	Qty	Approval Chief Eng / Prod Mgr	Approval QC Inspector

Part No: _____ **PAR #:** _____ **Fault Category:** _____ **NCR:** Yes No **DQA:** _____ **Date:** _____

Resolution: _____ **Disposition:** _____ **QA: N/C Closed:** _____ **Date:** _____

NCR:		WORK ORDER NON-CONFORMANCE (NCR)						
DATE	STEP	Description of NC Section A	Corrective Action Section B			Verification Section C	Approval Chief Eng	Approval QC Inspector
			Initial Chief Eng	Action Description Chief Eng	Sign & Date			

NOTE: Date & initial all entries

H:\fFORMS\Quality Assurance\approved QA\NCRWO RevE

Picklist Print

Thursday, March 10, 2011 8:47:17 AM

Work Order ID: 67192

Parent Item: D350-591-311

Parent Item Name: Heli-Access-Step, Long LH

Start Date: 3/10/2011 **Required Date:** 3/18/2011

Start Qty: 10.00 **Required Qty:** 10.00

D3066-1 Spacer	Manufactured	No	180	Each	113.0000	2	20	11·03·23

Location	Loc Qty	Loc Code
WA	113	
65072	6	
66131	107	20

MS20600-AD4W4 Rivets	Purchased	No	180	Each	2,263.000	16	160	11·03·23

Location	Loc Qty	Loc Code
ST321	2263	
113368	38	
114181	11	
114718	2	
115573	70	
115640	31	
116022	4	
116188	1500	
116712	607	160

D3065-041 Step Leg Assembly Hi	Manufactured	No	180	Each	57.0000	1	10	11·03·23

Location	Loc Qty	Loc Code
WA	57	
63554	17	
66149	40	10

Dart Aerospace Ltd

W/O:		WORK ORDER CHANGES					
DATE	STEP	PROCEDURE CHANGE	By	Date	Qty	Approval Chief Eng / Prod Mgr	Approval QC Inspector

Part No: _____ **PAR #:** _____ **Fault Category:** _____ **NCR:** Yes No **DQA:** _____ **Date:** _____

Resolution: _____ **Disposition:** _____ **QA: N/C Closed:** _____ **Date:** _____

NCR:		WORK ORDER NON-CONFORMANCE (NCR)						
DATE	STEP	Description of NC Section A	Corrective Action Section B			Verification Section C	Approval Chief Eng	Approval QC Inspector
			Initial Chief Eng	Action Description Chief Eng	Sign & Date			

NOTE: Date & initial all entries

H:\fFORMS\Quality Assurance\approved QA\NCRWO RevE

Picklist Print

Thursday, March 10, 2011 8:47:18 AM

Work Order ID: 67192

Parent Item: D350-591-311

Parent Item Name: Heli-Access-Step, Long LH

Start Date: 3/10/2011 **Required Date:** 3/18/2011

Start Qty: 10.00 **Required Qty:** 10.00

D3067-1 End Plate	Manufactured	No	180	Each	128.0000	1	10	11·03·23	
			Location	**Loc Qty**	**Loc Code**				
			WA	128					
			65969	128					
AN3-35A Bolt	Purchased	No	250	Each	118.0000	2	20	11/4/11	
			Location	**Loc Qty**	**Loc Code**				
			ST353	118			20		
			116191	78					
			117094	40					
D3235-1 Mounting Lug	Manufactured	No	250	Each	47.0000	2	20	3669411 11/4/8	
			Location	**Loc Qty**	**Loc Code**				
			ST471	47					
			65073	47					
D3278-041 Support Assembly	Manufactured	No	250	Each	35.0000	1	10	11/4/8	
			Location	**Loc Qty**	**Loc Code**				
			ST471	35					
			66155	35			10		

Dart Aerospace Ltd

W/O:		WORK ORDER CHANGES					
DATE	STEP	PROCEDURE CHANGE	By	Date	Qty	Approval Chief Eng / Prod Mgr	Approval QC Inspector

Part No: _____ **PAR #:** _____ **Fault Category:** _____ **NCR:** Yes No **DQA:** _____ **Date:** _____

Resolution: _____ **Disposition:** _____ **QA: N/C Closed:** _____ **Date:** _____

NCR:		WORK ORDER NON-CONFORMANCE (NCR)						
DATE	STEP	Description of NC Section A	Corrective Action Section B			Verification Section C	Approval Chief Eng	Approval QC Inspector
			Initial Chief Eng	Action Description Chief Eng	Sign & Date			

NOTE: Date & initial all entries

H:\fFORMS\Quality Assurance\approved QA\NCRWO RevE

Picklist Print

Thursday, March 10, 2011 8:47:18 AM

Work Order ID: 67192

Parent Item: D350-591-311

Parent Item Name: Heli-Access-Step, Long LH

Start Date: 3/10/2011 **Required Date:** 3/18/2011

Start Qty: 10.00 **Required Qty:** 10.00

AN960JD416	NAS1149D0463J	Purchased	No	250	Each	30.0000	16	160	M117065 S	

Washer

Location	Loc Qty	Loc Code
ST300	24	
113288	24	
ST356	6	
115622	6	

AN960JD516	NAS1149D0563J	Purchased	No	250	Each	34.0000	4	40	M116702 S	

Washer

Location	Loc Qty	Loc Code
ST	34	
103694	18	
107534	12	
109287	4	

AN5-36A		Purchased	No	250	Each	137.0000	2	20	11/4/11 S	100

Bolt

Location	Loc Qty	Loc Code
ST341	137	
114292	1	
116191	1	
116549	35	20
116704	100	

Dart Aerospace Ltd

W/O:		WORK ORDER CHANGES					
DATE	STEP	PROCEDURE CHANGE	By	Date	Qty	Approval Chief Eng / Prod Mgr	Approval QC Inspector

Part No: _____ **PAR #:** _____ **Fault Category:** _____ **NCR:** Yes No **DQA:** _____ **Date:** _____

Resolution: _____ **Disposition:** _____ **QA: N/C Closed:** _____ **Date:** _____

NCR:		WORK ORDER NON-CONFORMANCE (NCR)						
DATE	STEP	Description of NC Section A	Corrective Action Section B			Verification Section C	Approval Chief Eng	Approval QC Inspector
			Initial Chief Eng	Action Description Chief Eng	Sign & Date			

NOTE: Date & initial all entries

H:\FORMS\Quality Assurance\approved QA\NCRWO RevE

Picklist Print

Thursday, March 10, 2011 8:47:18 AM

Work Order ID: 67192

Parent Item: D350-591-311

Parent Item Name: Heli-Access-Step, Long LH

Start Date: 3/10/2011 **Required Date:** 3/18/2011

Start Qty: 10.00 **Required Qty:** 10.00

D2618	Manufactured	No	250	Each	63.0000	2	20	B66942 11/4/11
Bushing								

Location	Loc Qty	Loc Code
ST019	63	
65071	3	
66132	60	

D2230-3	Manufactured	No	250	Each	12.0000	4	40	B66936 11/4/11
Lug								

Location	Loc Qty	Loc Code
Return 2010	4	
62927	2	
63544	2	
ST476	8	
55452	2	
66126	6	

D2856-400	Manufactured	No	250	f	146.2980	1.2	12	11/4/11
Abraison Strip								

Location	Loc Qty	Loc Code
ST403	146.2980421	
56626	0.00004211	
59920	43.381	
63735	102.917	

measured 3/10/11

*** cut (2) at 7.20" (D2856-400-720) ***

Dart Aerospace Ltd

W/O:	WORK ORDER CHANGES						
DATE	STEP	PROCEDURE CHANGE	By	Date	Qty	Approval Chief Eng / Prod Mgr	Approval QC Inspector

Part No: _____ **PAR #:** _____ **Fault Category:** _____ **NCR:** Yes No **DQA:** _____ **Date:** _____

Resolution: _____ **Disposition:** _____ **QA: N/C Closed:** _____ **Date:** _____

NCR:	WORK ORDER NON-CONFORMANCE (NCR)							
DATE	STEP	Description of NC Section A	Corrective Action Section B			Verification Section C	Approval Chief Eng	Approval QC Inspector
			Initial Chief Eng	Action Description Chief Eng	Sign & Date			

NOTE: Date & initial all entries

Picklist Print

Thursday, March 10, 2011 8:47:19 AM

Work Order ID: 67192

Parent Item: D350-591-311

Parent Item Name: Heli-Access-Step, Long LH

Start Date: 3/10/2011 **Required Date:** 3/18/2011

Start Qty: 10.00 **Required Qty:** 10.00

MS21042L3 Nut	Purchased	No	250	Each	2,376.000	2	20	11/4/11 SP

S 40

Location		Loc Qty	Loc Code	
ST300		2376		
	116391	776		20
	116540	800		
	116549	800		

AN4-13A Bolt	Purchased	No	250	Each	592.0000	8	80	11/4/11 SP

S 40

Location		Loc Qty	Loc Code	
ST357		592		
	116786	292		
	117094	300		80

MS21042L5 Nut	Purchased	No	250	Each	970.0000	2	20	11/4/11 SP (100)

S 40

Location		Loc Qty	Loc Code	
ST139		26		
	114813	26		
ST300		944		
	115594	248		20
	116105	496		
	116548	200		

Dart Aerospace Ltd

W/O:		WORK ORDER CHANGES					
DATE	STEP	PROCEDURE CHANGE	By	Date	Qty	Approval Chief Eng / Prod Mgr	Approval QC Inspector

Part No: _____ **PAR #:** _____ **Fault Category:** _____ **NCR:** Yes No **DQA:** _____ **Date:** _____

Resolution: _____ **Disposition:** _____ **QA: N/C Closed:** _____ **Date:** _____

NCR:		WORK ORDER NON-CONFORMANCE (NCR)						
DATE	STEP	Description of NC Section A	Corrective Action Section B			Verification Section C	Approval Chief Eng	Approval QC Inspector
			Initial Chief Eng	Action Description Chief Eng	Sign & Date			

NOTE: Date & initial all entries

Picklist Print

Thursday, March 10, 2011 8:47:19 AM

Work Order ID: 67192

Parent Item: D350-591-311

Parent Item Name: Heli-Access-Step, Long LH

Start Date: 3/10/2011 **Required Date:** 3/18/2011

Start Qty: 10.00 **Required Qty:** 10.00

MS21042L4		Purchased	No	250	Each	4,376.000	8	80	11/1/8
Nut									

Location		Loc Qty	Loc Code	
ST300		4376		
	1123143	2		
	115589	10		
	115621	20		
	116188	2344		80
	116823	2000		

AN960JD10	NAS1149D0363J	Purchased	No	250	Each	24.0000	4	40	M116583 11/4/11
Washer									

Location		Loc Qty	Loc Code
ST		6	
	107715	6	
ST335		18	
	105792	2	
	112279	16	

Dart Aerospace Ltd

W/O:		WORK ORDER CHANGES					
DATE	STEP	PROCEDURE CHANGE	By	Date	Qty	Approval Chief Eng / Prod Mgr	Approval QC Inspector

Part No: _____ **PAR #:** _____ **Fault Category:** _____ **NCR:** Yes No **DQA:** _____ **Date:** _____

Resolution: _____ **Disposition:** _____ **QA: N/C Closed:** _____ **Date:** _____

NCR:		WORK ORDER NON-CONFORMANCE (NCR)						
DATE	STEP	Description of NC Section A	Corrective Action Section B			Verification Section C	Approval Chief Eng	Approval QC Inspector
			Initial Chief Eng	Action Description Chief Eng	Sign & Date			

NOTE: Date & initial all entries

H:\fFORMS\Quality Assurance\approved QA\NCRWO RevE

DESIGN	DRAWN BY	DART AEROSPACE LTD HAWKESBURY, ONTARIO, CANADA	
CHECKED	APPROVED	DRAWING NO. D3272	REV. B SHEET 1 OF 3
DATE 07.05.18		TITLE STEP ASSEMBLY, HI LONG	SCALE NTS

A	04.03.01	NEW ISSUE
B	07.05.18	D3272-1 WAS D2622-120

RELEASED
07 06 04

QTY -041	QTY -042	PART NUMBER	DESCRIPTION
X		**D3272-041**	**STEP ASSEMBLY, HIGH LONG (LH)**
	X	**D3272-042**	**STEP ASSEMBLY, HIGH LONG (RH)**
1	1	D3065-041	LEG ASSEMBLY
2	2	D3066-1	SPACER
2	2	D3067-1	END PLATE
2	2	D3219-1	SUPPORT
B 1	1	D3272-1	STEP
16	16	MS20600AD4W4	RIVET

GENERAL NOTES:

1) D3272-041 SHOWN. FOR D3272-042, INSTALL D3219-1 SUPPORT OPPOSITE SIDE
2) WELD PER DART QSI 004
3) FINISH: CHEMICAL CONVERSION COAT PER DART QSI 005.4.1
   POWDER COAT ASSEMBLY WHITE (4.3.5.1) PER DART QSI 005 4.3
   BLACK ANTI-SKID PAINT PER DART QSI 005 4.4
4) TOLERANCES ARE PER DART QSI 018 UNLESS OTHERWISE NOTED.
5) ALL DIMENSIONS ARE IN INCHES UNLESS OTHERWISE NOTED.
6) BREAK ALL SHARP EDGES 0.005 TO 0.010 MAX.

SHOP COPY
RETURN TO
ENGINEERING
UNCONTROLLED COPY
SUBJECT TO AMENDMENT
WITHOUT NOTICE
WORK ORDER
NO. 67192
11-03-10

Copyright © 2004 by DART AEROSPACE LTD
THIS DOCUMENT IS PRIVATE AND CONFIDENTIAL AND IS SUPPLIED ON THE EXPRESS CONDITION THAT IT IS NOT TO BE USED FOR ANY PURPOSE OR COPIED OR COMMUNICATED TO ANY OTHER PERSON WITHOUT WRITTEN PERMISSION FROM DART AEROSPACE LTD.

Dart Aerospace Ltd

W/O:		WORK ORDER CHANGES					
DATE	STEP	PROCEDURE CHANGE	By	Date	Qty	Approval Chief Eng / Prod Mgr	Approval QC Inspector

Part No: _____ **PAR #:** _____ **Fault Category:** _____ **NCR:** Yes No **DQA:** _____ **Date:** _____

Resolution: _____ **Disposition:** _____ **QA: N/C Closed:** _____ **Date:** _____

NCR:		WORK ORDER NON-CONFORMANCE (NCR)						
DATE	STEP	Description of NC Section A	Corrective Action Section B			Verification Section C	Approval Chief Eng	Approval QC Inspector
			Initial Chief Eng	Action Description Chief Eng	Sign & Date			

NOTE: Date & initial all entries

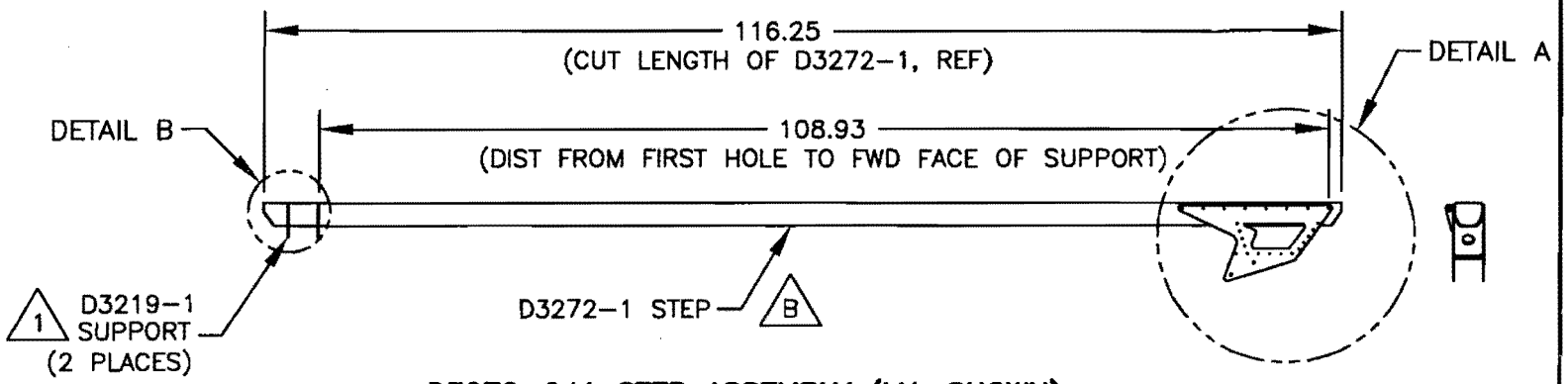

D3272-041 STEP ASSEMBLY (LH, SHOWN)

D3272-042 STEP ASSEMBLY (RH, OPPOSITE)

w/o u7192

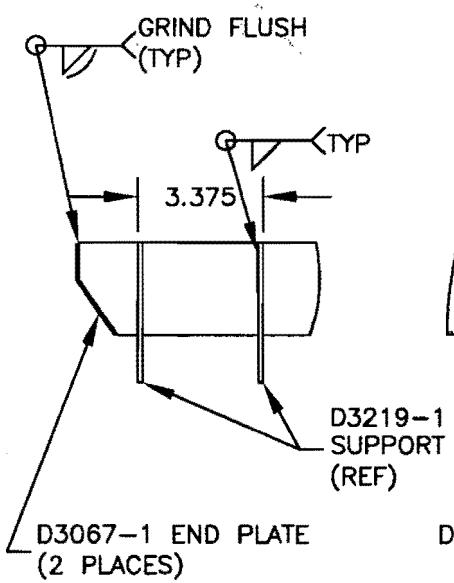

DETAIL B
(SCALE 1:5)

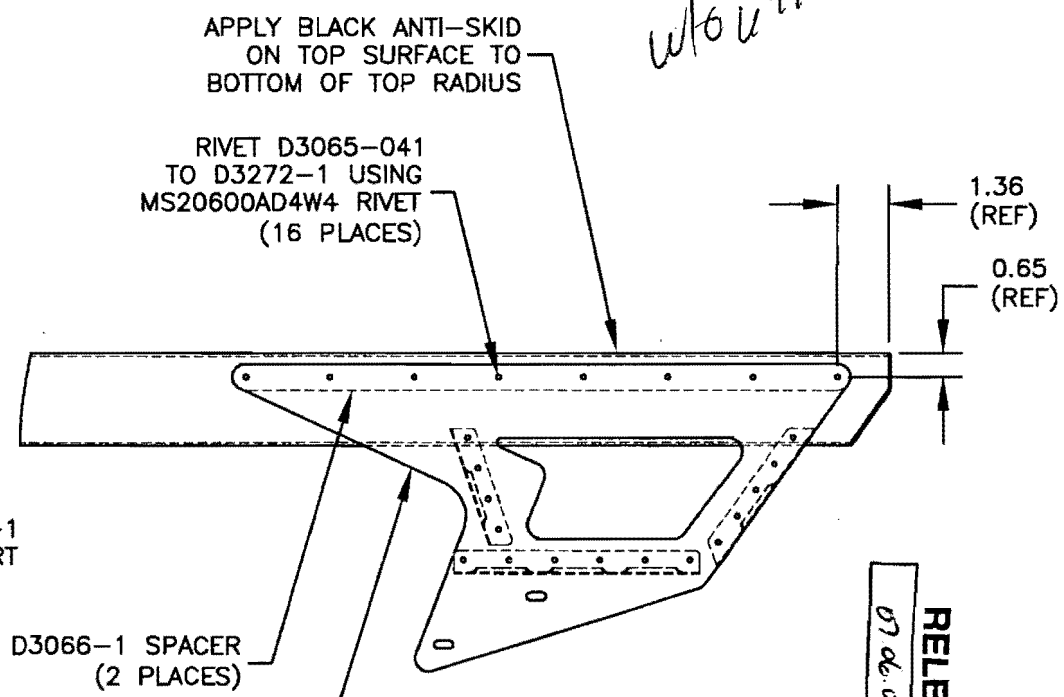

DETAIL A
(SCALE 1:5)

RELEASED
07.06.04

DESIGN	DRAWN BY	DART AEROSPACE LTD HAWKESBURY, ONTARIO, CANADA	
CHECKED	APPROVED	DRAWING NO. D3272	REV. B
DATE 07.05.18		TITLE STEP ASSEMBLY, HI LONG	SHEET 2 OF 3
			SCALE 1:20

Copyright © 2004 by DART AEROSPACE LTD
THIS DOCUMENT IS PRIVATE AND CONFIDENTIAL AND IS SUPPLIED ON THE EXPRESS CONDITION THAT IT IS NOT TO BE USED FOR ANY PURPOSE OR COPIED OR COMMUNICATED TO ANY OTHER PERSON WITHOUT WRITTEN PERMISSION FROM DART AEROSPACE LTD.

Dart Aerospace Ltd

W/O:		WORK ORDER CHANGES					
DATE	STEP	PROCEDURE CHANGE	By	Date	Qty	Approval Chief Eng / Prod Mgr	Approval QC Inspector

Part No: _____ **PAR #:** _____ **Fault Category:** _____ **NCR:** Yes No **DQA:** _____ **Date:** _____

Resolution: _____ **Disposition:** _____ **QA: N/C Closed:** _____ **Date:** _____

NCR:		WORK ORDER NON-CONFORMANCE (NCR)						
DATE	STEP	Description of NC Section A	Corrective Action Section B			Verification Section C	Approval Chief Eng	Approval QC Inspector
			Initial Chief Eng	Action Description Chief Eng	Sign & Date			

NOTE: Date & initial all entries

H:\fFORMS\Quality Assurance\approved QA\NCRWO RevE

DESIGN	DRAWN BY	DART AEROSPACE LTD HAWKESBURY, ONTARIO, CANADA	
CHECKED	APPROVED	DRAWING NO. D3272	REV. B SHEET 3 OF 3
DATE 07.05.18		TITLE STEP ASSEMBLY, HI LONG	SCALE 1:20

RELEASED
07 06.04

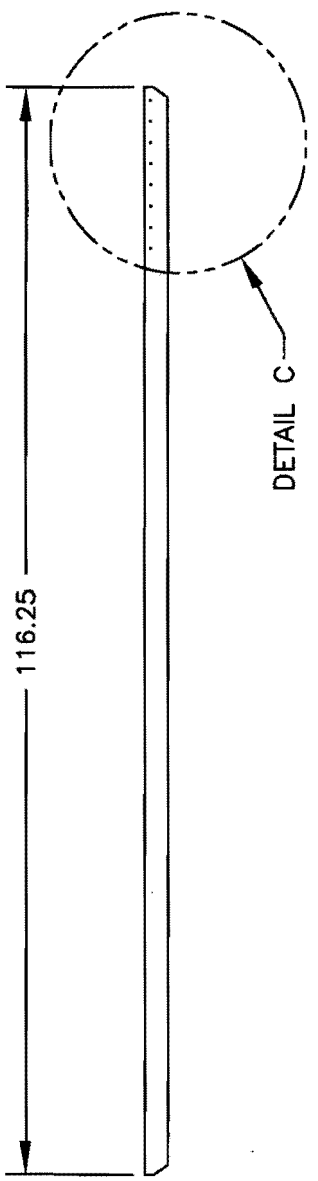

B D3272-1 STEP
(MAKE FROM D2622-120 STEP EXTRUSION)

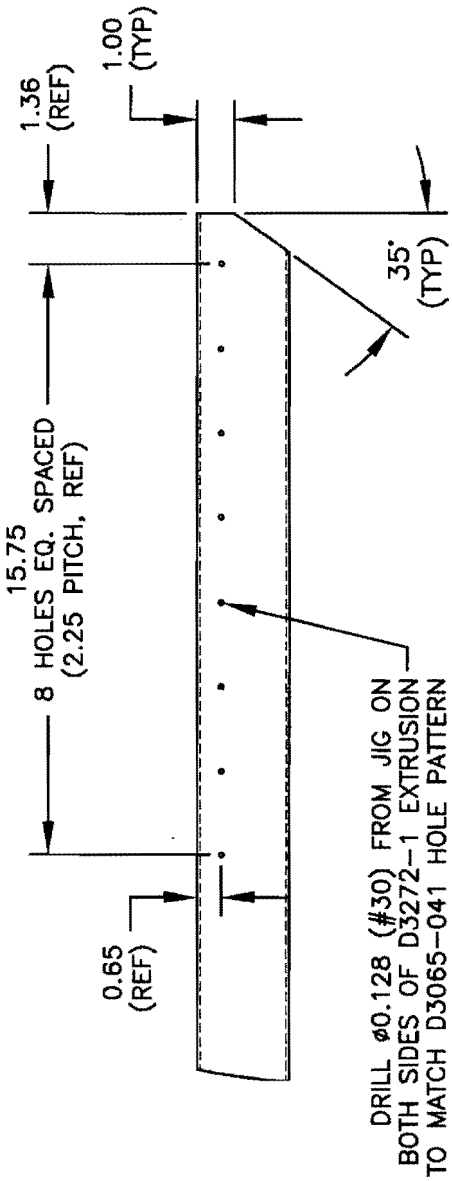

DETAIL C
(SCALE 1:5)

Copyright © 2004 by DART AEROSPACE LTD
THIS DOCUMENT IS PRIVATE AND CONFIDENTIAL AND IS SUPPLIED ON THE EXPRESS CONDITION THAT IT IS NOT TO BE USED FOR ANY PURPOSE OR COPIED OR COMMUNICATED TO ANY OTHER PERSON WITHOUT WRITTEN PERMISSION FROM DART AEROSPACE LTD.

Dart Aerospace Ltd

W/O:		WORK ORDER CHANGES					
DATE	STEP	PROCEDURE CHANGE	By	Date	Qty	Approval Chief Eng / Prod Mgr	Approval QC Inspector

Part No: _____ **PAR #:** _____ **Fault Category:** _____ **NCR:** Yes No **DQA:** _____ **Date:** _____

Resolution: _____ **Disposition:** _____ **QA: N/C Closed:** _____ **Date:** _____

NCR:		WORK ORDER NON-CONFORMANCE (NCR)						
DATE	STEP	Description of NC Section A	Corrective Action Section B			Verification Section C	Approval Chief Eng	Approval QC Inspector
			Initial Chief Eng	Action Description Chief Eng	Sign & Date			

NOTE: Date & initial all entries

H:\FORMS\Quality Assurance\approved QA\NCRWO RevE

REFERENCE ONLY

Qty -211	Qty -212	Qty -213	Qty -214	Qty -215	Qty -216	Qty -311	Qty -312	Part Number	Description
X								D350-591-211	***Heli-Access-Step***™, Long Step – High Skid, LH
	X							D350-591-212	***Heli-Access-Step***™, Long Step – High Skid, RH
		X						D350-591-213	***Heli-Access-Step***™, Short Step – High Skid, LH
			X					D350-591-214	***Heli-Access-Step***™, Short Step – High Skid, RH
				X				D350-591-215	***Heli-Access-Step***™, Short Step – Low Skid, LH
					X			D350-591-216	***Heli-Access-Step***™, Short Step – Low Skid, RH
						X		D350-591-311	***Heli-Access-Step***™, Long Step – High Skid, LH
							X	D350-591-312	***Heli-Access-Step***™, Long Step – High Skid, RH
1								D3070-041	STEP ASSEMBLY (HIGH-LONG, LH)
	1							D3070-042	STEP ASSEMBLY (HIGH-LONG, RH)
		1						D3078-041	STEP ASSEMBLY (HIGH-SHORT, LH)
			1					D3078-042	STEP ASSEMBLY (HIGH-SHORT, RH)
				1				D3168-041	STEP ASSEMBLY (LOW-SHORT, LH)
					1			D3168-042	STEP ASSEMBLY (LOW-SHORT, RH)
						1		D3272-041	STEP ASSEMBLY (HIGH-LONG, LH)
							1	D3272-042	STEP ASSEMBLY (HIGH-LONG, RH)
4	4							D2182B035	RUBBER CUSHION
		2	2	2	2			D2230-1	MOUNTING LUG
		2	2	2	2	4	4	D2230-3	MOUNTING LUG
8	8							D2274	RADIUS BLOCK
						2	2	D2618	BUSHING
4	4	4	4	4	4			D2732-030	CUSHION
2	2	1	1	1	1	2	2	D2856-400-720	ABRASION STRIP
2	2							D3064-1	CLAMP
1	1							D3079-041	SUPPORT ASSEMBLY
4	4							D3080-1	CLAMP
						2	2	D3235-1	MOUNTING LUG
						1	1	D3278-041	SUPPORT ASSEMBLY
2	2	2	2	2	2	2	2	AN3-35A	BOLT
10	10	2	2	2	2			AN4-11A	BOLT
		4	4	4	4	8	8	AN4-13A	BOLT
						2	2	AN5-36A	BOLT
4	4	4	4	4	4	4	4	AN960JD10	WASHER
20	20	12	12	12	12	16	16	AN960JD416	WASHER
						4	4	AN960JD516	WASHER
2	2	2	2	2	2	2	2	MS21042L3	NUT
10	10	6	6	6	6	8	8	MS21042L4	NUT
						2	2	MS21042L5	NUT
						1	1	*DSI 9410-011	STEP MODIFICATION KIT

*DSI 9410-011 Step Modification Kits are provided with all D350-591-311 and D350-591-312 Steps. This kit is provided as an option for the installer and is therefore **NOT REQUIRED** to complete the installation of the D350-591-311 or D350-591-312 Steps. Refer to Figure 21 for installation of the DSI 9410-011 Kit.

• COPYRIGHT © 1993 BY DART AEROSPACE LTD •
THIS DOCUMENT IS PRIVATE AND CONFIDENTIAL AND IS SUPPLIED ON THE EXPRESS CONDITION THAT IT IS NOT TO BE USED FOR ANY PURPOSE OR COPIED OR COMMUNICATED TO ANY OTHER PERSON WITHOUT WRITTEN PERMISSION FROM DART AEROSPACE LTD.